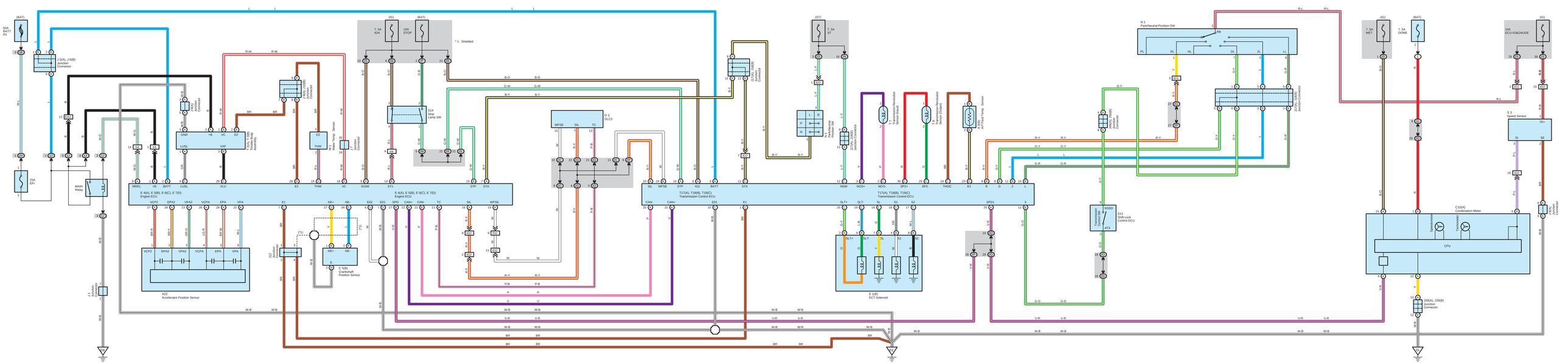
(BAT)
50A BATT PII
5(A5), 2(B3) Junction Connector
25A EFI
MAIN Relay
(IG)
7.5A IGN
10A STOP
(BAT)
* 1 : Shielded
J6/A1 Junction Connector
J1/A1 Junction Connector
Body J1/B8 Connector
E 2 Throttle Body Heating
TH1 Water Temp. Sensor
J7 Junction Connector
S14 Stop Lamp SW
D 3 DLC3
WFSE SIL TC
E 4(A4), E 5(B), E 6(C), E 7(D) Engine ECU
MREL +B BATT VCUSL VCU E2 THW VC KGSW STI STP STA
VCP2 EPA2 VPA2 VCPA EPA VPA
A22 Accelerator Position Sensor
J12 Junction Connector
(*1)
NE+ NE-
C 5(B) Crankshaft Position Sensor
E02 E01 SPD CAN+ CAN- TC SIL WFSE
J1 Junction Connector
(ST)
7.5A ST
21(A), 2(B3) Junction Connector
Park/Neutral Position SW
J2/A1 Junction Connector
T1 Transmission Intermediate Sensor (Input)
T2 Transmission Intermediate Sensor (Output)
T3 Transmission Oil Temp. Sensor
T4 Vehicle Speed Sensor
T7(A), T18(B), T19(C) Transmission Control ECU
CAN- CAN+ SPD SIL MFSE STP GO BATT STA
NSW NCO+ NCO- SPF+ SPF- THOC E2 R D 2 L
SLT+ SLT- SL S1 S2 E1
E 1(B) ECT Solenoid
SPD1
N 1 Park/Neutral Position SW
PL RL NL DL ZL LL
J2/A1 Junction Connector
J3/A1 Junction Connector
Transmission Control Switch
HSSD S11 Shift Lock Control ECU
7.5A MET
7.5A DOME
15A ECU-IG/GAUGE
S 3 Speed Sensor
IG+ SI SE
C10(A) Combination Meter
Speedometer
Tachometer
CPU
J2/B1 Junction Connector
J2/B2 Junction Connector