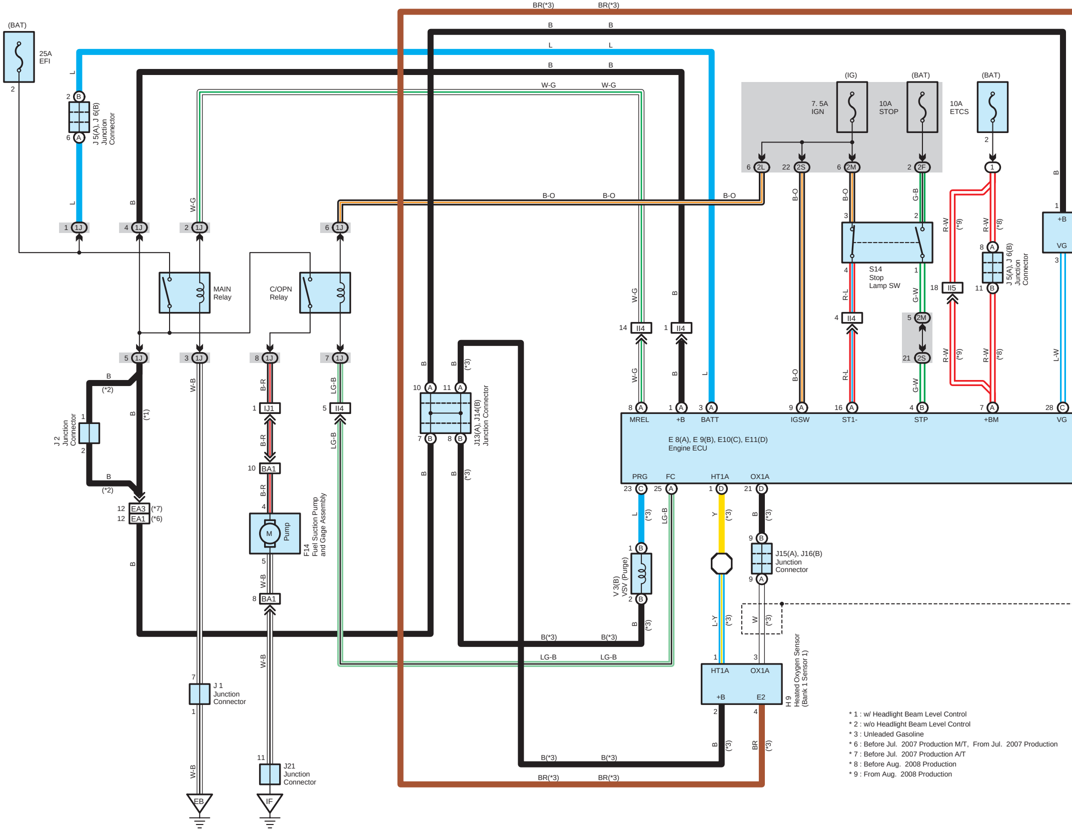
(BAT)
25A
EFI
2
L
2 B
J 5(A), J 6(B)
Junction
Connector
6 A
L
B
W-G
1 1J
4 1J
2 1J
6 1J
MAIN
Relay
C/OPN
Relay
5 1J
3 1J
8 1J
7 1J
B
(*2)
(*1)
J 2
Junction
Connector
1
2
12 EA3 (*7)
12 EA1 (*6)
W-B
B-R
1 IJ1
10 BA1
4
M
Pump
F14
Fuel Suction Pump
and Gage Assembly
5
W-B
8 BA1
LG-B
5 II4
7
J 1
Junction
Connector
1
11
J21
Junction
Connector
EB
IF
BR(*3)
B
L
W-G
B-O
10 A
11 A
(*3)
J13(A), J14(B)
Junction Connector
7 B
8 B
(IG)
(BAT)
7. 5A
IGN
10A
STOP
10A
ETCS
6 2L
22 2S
6 2M
2 2F
1
B-O
G-B
3
2
S14
Stop
Lamp SW
4
1
R-L
G-W
4 II4
5 2M
21 2S
18 II5
R-W
(*9)
(*8)
8 A
11 B
14 II4
1 II4
1
+B
VG
3
L-W
8 A
1 A
3 A
9 A
16 A
4 B
7 A
28 C
MREL
+B
BATT
IGSW
ST1-
STP
+BM
VG
E 8(A), E 9(B), E10(C), E11(D)
Engine ECU
PRG
FC
HT1A
OX1A
23 C
25 A
1 D
21 D
Y
1 B
2 B
V 3(B)
VSV (Purge)
9 B
9 A
J15(A), J16(B)
Junction
Connector
L-Y
W
B(*3)
LG-B
1
3
HT1A
OX1A
+B
E2
2
4
H 9
Heated Oxygen Sensor
(Bank 1 Sensor 1)
BR

* 1 : w/ Headlight Beam Level Control
* 2 : w/o Headlight Beam Level Control
* 3 : Unleaded Gasoline
* 6 : Before Jul. 2007 Production M/T, From Jul. 2007 Production
* 7 : Before Jul. 2007 Production A/T
* 8 : Before Aug. 2008 Production
* 9 : From Aug. 2008 Production

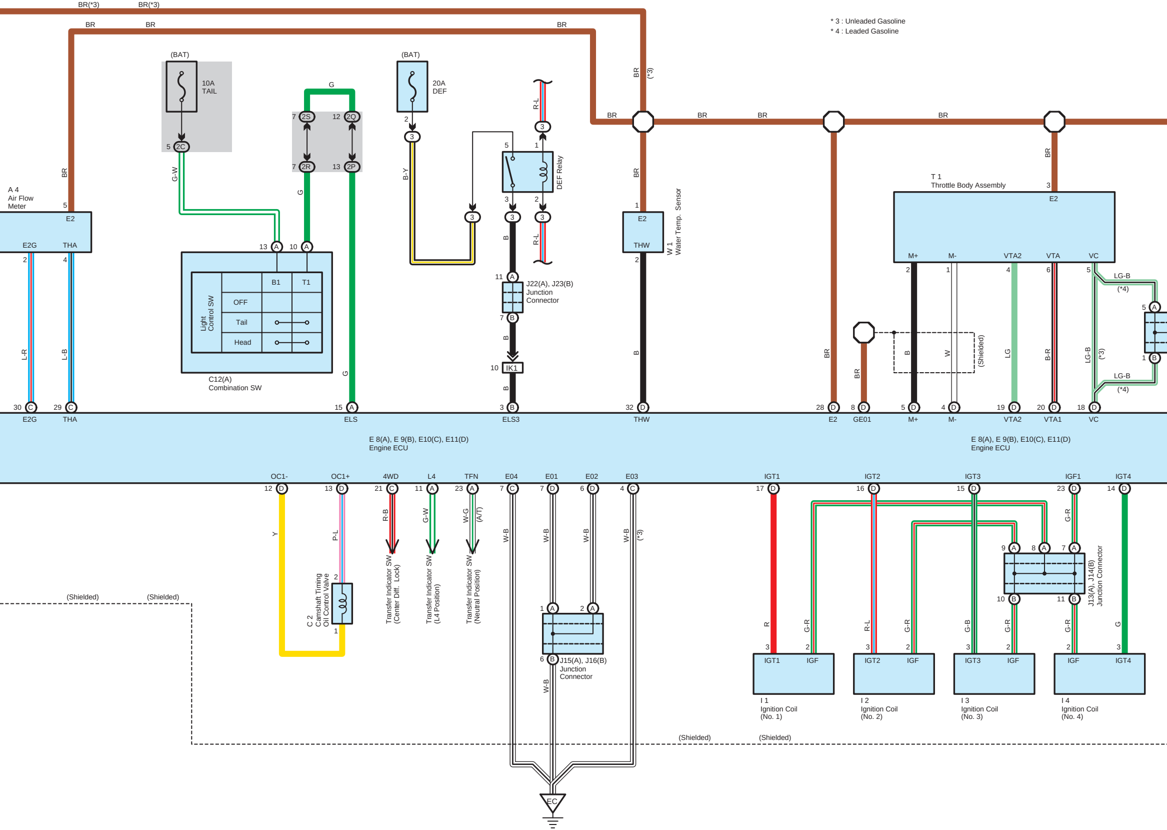
* 3 : Unleaded Gasoline
* 4 : Leaded Gasoline

BR(*3)
BR
(BAT)
10A TAIL
(BAT)
20A DEF
G
2S
2Q
2R
2P
2C
G-W
B-Y
R-L
DEF Relay
A 4 Air Flow Meter
E2
E2G
THA
L-R
L-B
Light Control SW
B1
T1
OFF
Tail
Head
C12(A) Combination SW
J22(A), J23(B) Junction Connector
IK1
B
W 1 Water Temp. Sensor
THW
T 1 Throttle Body Assembly
M+
M-
VTA2
VTA
VC
LG-B
(*4)
(*3)
(Shielded)
LG
B-R
W
E2G
THA
ELS
ELS3
THW
E2
GE01
M+
M-
VTA2
VTA1
VC
E 8(A), E 9(B), E10(C), E11(D) Engine ECU
OC1-
OC1+
4WD
L4
TFN
E04
E01
E02
E03
IGT1
IGT2
IGT3
IGF1
IGT4
Y
P-L
R-B
G-W
W-G
(A/T)
W-B
C 2 Camshaft Timing Oil Control Valve
Transfer Indicator SW (Center Diff. Lock)
Transfer Indicator SW (L4 Position)
Transfer Indicator SW (Neutral Position)
J15(A), J16(B) Junction Connector
EC
R
G-R
R-L
G-B
J13(A), J14(B) Junction Connector
IGF
I 1 Ignition Coil (No. 1)
I 2 Ignition Coil (No. 2)
I 3 Ignition Coil (No. 3)
I 4 Ignition Coil (No. 4)

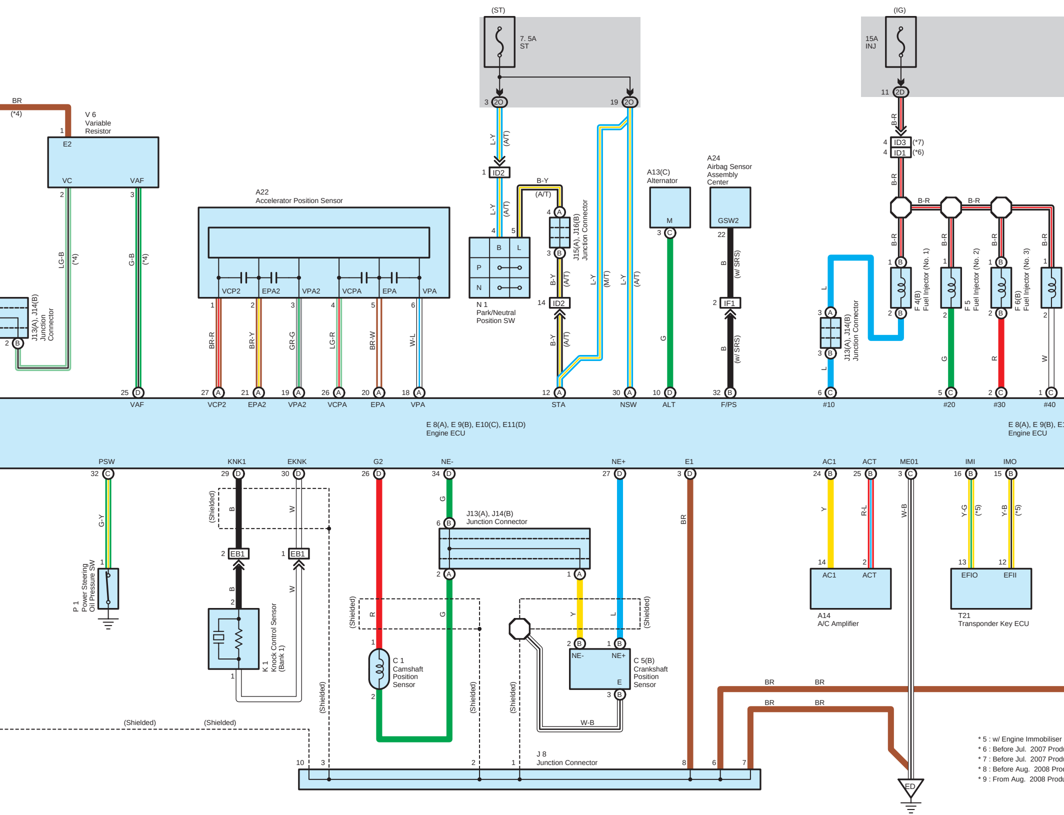
(ST)
7. 5A
ST
3 2O
19 2O
L-Y (A/T)
1 ID2
N 1
Park/Neutral
Position SW
B L P N
B-Y (A/T)
J15(A), J16(B)
Junction Connector
14 ID2
L-Y (M/T)
L-Y (A/T)
(IG)
15A
INJ
11 2D
B-R
4 ID3 (*7)
4 ID1 (*6)
BR
(*4)
V 6
Variable
Resistor
E2
VC
VAF
LG-B (*4)
G-B (*4)
J13(A), J14(B)
Junction
Connector
A22
Accelerator Position Sensor
VCP2
EPA2
VPA2
VCPA
EPA
VPA
BR-R
BR-Y
GR-G
LG-R
BR-W
W-L
A13(C)
Alternator
M
G
A24
Airbag Sensor
Assembly
Center
GSW2
B (w/ SRS)
2 IF1
L
J13(A), J14(B)
Junction Connector
F 4(B)
Fuel Injector (No. 1)
F 5
Fuel Injector (No. 2)
F 6(B)
Fuel Injector (No. 3)
G
R
W
25 D VAF
27 A VCP2
21 A EPA2
19 A VPA2
26 A VCPA
20 A EPA
18 A VPA
12 A STA
30 A NSW
10 D ALT
32 B F/PS
6 C #10
5 C #20
2 C #30
1 C #40
E 8(A), E 9(B), E10(C), E11(D)
Engine ECU
E 8(A), E 9(B), E1
Engine ECU
PSW 32 C
KNK1 29 D
EKNK 30 D
G2 26 D
NE- 34 D
NE+ 27 D
E1 3 D
AC1 24 B
ACT 25 B
ME01 3 C
IMI 16 B
IMO 15 B
G-Y
P 1
Power Steering
Oil Pressure SW
(Shielded)
B
W
2 EB1
1 EB1
K 1
Knock Control Sensor
(Bank 1)
G
J13(A), J14(B)
Junction Connector
R
C 1
Camshaft
Position
Sensor
Y
L
NE-
NE+
E
C 5(B)
Crankshaft
Position
Sensor
W-B
BR
Y
R-L
W-B
Y-G (*5)
Y-B (*5)
AC1
ACT
A14
A/C Amplifier
EFIO
EFII
T21
Transponder Key ECU
J 8
Junction Connector
ED

* 5 : w/ Engine Immobiliser
* 6 : Before Jul. 2007 Prod
* 7 : Before Jul. 2007 Prod
* 8 : Before Aug. 2008 Prod
* 9 : From Aug. 2008 Produ

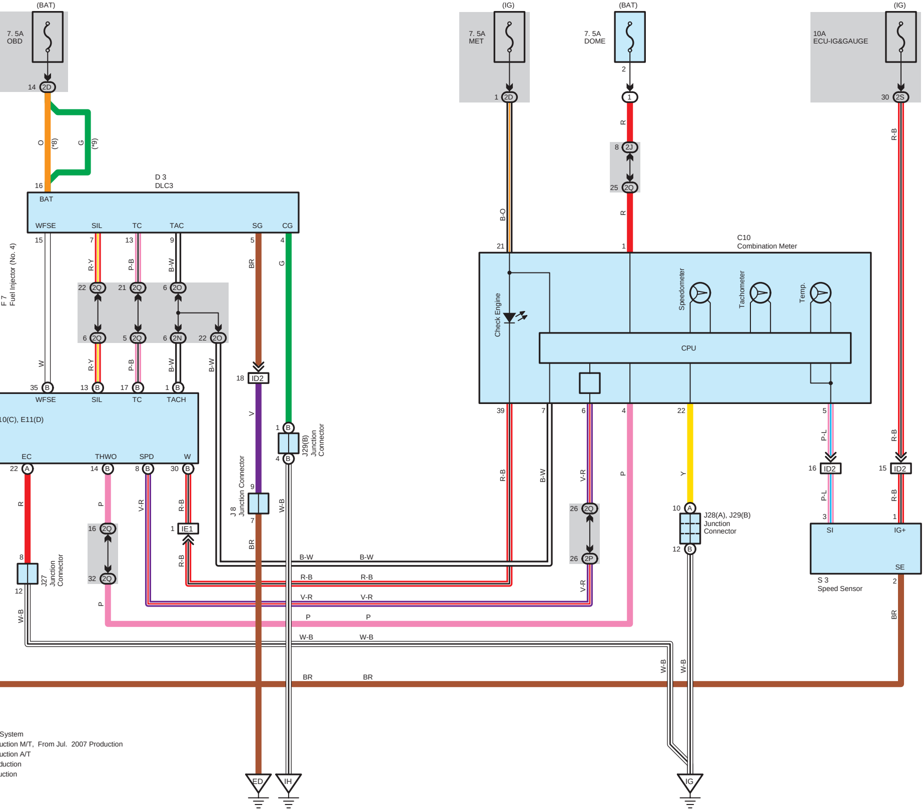
(BAT)
7. 5A
OBD
14 2D
O (*8)
G (*9)
16
D 3
DLC3
BAT
WFSE
SIL
TC
TAC
SG
CG
15
7
13
9
5
4
R-Y
P-B
B-W
BR
G
22 2Q
21 2Q
6 2O
6 2Q
5 2Q
6 2N
22 2O
W
R-Y
P-B
B-W
B-W
18 ID2
V
F 7
Fuel Injector (No. 4)
35 B
13 B
17 B
1 B
WFSE
SIL
TC
TACH
10(C), E11(D)
EC
THWO
SPD
W
22 A
14 B
8 B
30 B
R
P
V-R
R-B
16 2Q
32 2Q
1 IE1
R-B
8
12
J27
Junction
Connector
W-B
1 B
4 B
J29(B)
Junction
Connector
9
7
J 8
Junction Connector
BR
W-B
B-W
R-B
V-R
P
W-B
BR
ED
IH
(IG)
7. 5A
MET
1 2D
B-O
21
(BAT)
7. 5A
DOME
2
1
R
8 2J
25 2O
R
1
C10
Combination Meter
Check Engine
Speedometer
Tachometer
Temp.
CPU
39
7
6
4
22
5
R-B
B-W
V-R
P
Y
P-L
26 2Q
26 2P
V-R
10 A
12 B
J28(A), J29(B)
Junction
Connector
W-B
W-B
IG
(IG)
10A
ECU-IG&GAUGE
30 2S
R-B
R-B
16 ID2
15 ID2
P-L
R-B
3
1
SI
IG+
SE
S 3
Speed Sensor
2
BR

System
uction M/T, From Jul. 2007 Production
uction A/T
duction
uction