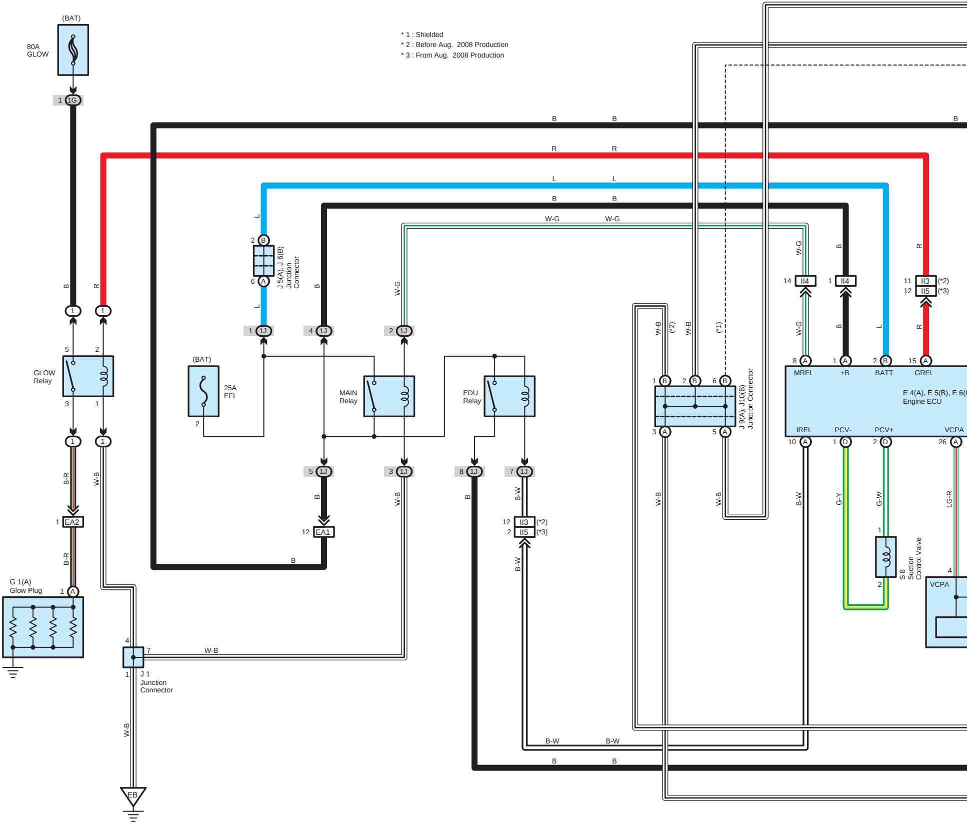

* 1 : Shielded
* 2 : Before Aug. 2008 Production
* 3 : From Aug. 2008 Production

(BAT)
80A GLOW
1 1G
B
R
1
1
5
2
GLOW Relay
3
1
B-R
W-B
1 EA2
G 1(A) Glow Plug
1 A
4
7
W-B
1
J 1 Junction Connector
EB
L
2 B
6 A
J 5(A), J 6(B) Junction Connector
1 1J
4 1J
2 1J
W-G
(BAT)
25A EFI
2
MAIN Relay
EDU Relay
5 1J
3 1J
8 1J
7 1J
12 EA1
12 II3 (*2)
2 II5 (*3)
B-W
B-W
B
B
W-B
(*2)
(*1)
1 B
2 B
6 B
3 A
5 A
J 9(A), J10(B) Junction Connector
14 II4
1 II4
11 II3 (*2)
12 II5 (*3)
8 A
1 A
2 B
15 A
MREL
+B
BATT
GREL
E 4(A), E 5(B), E 6(
Engine ECU
IREL
PCV-
PCV+
VCPA
10 A
1 D
2 D
26 A
G-Y
G-W
LG-R
1
2
S 8 Suction Control Valve
4
VCPA

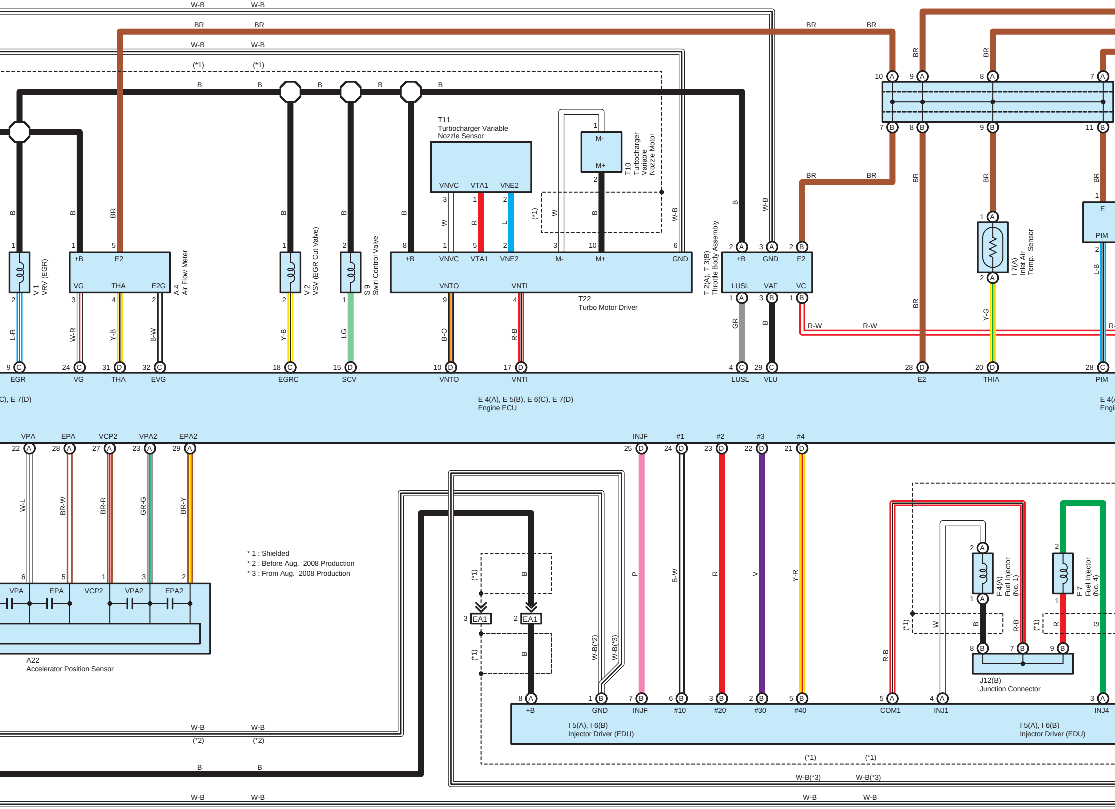
W-B
BR
(*1)
B
T11
Turbocharger Variable
Nozzle Sensor
VNVC
VTA1
VNE2
M-
M+
T10
Turbocharger
Variable
Nozzle Motor
(*1)
W
R
L
V 1
VRV (EGR)
+B
E2
VG
THA
E2G
A 4
Air Flow Meter
V 2
VSV (EGR Cut Valve)
S 9
Swirl Control Valve
+B
VNVC
VTA1
VNE2
M-
M+
GND
VNTO
VNTI
T22
Turbo Motor Driver
T 2(A), T 3(B)
Throttle Body Assembly
+B
GND
E2
LUSL
VAF
VC
R-W
I 7(A)
Inlet Air
Temp. Sensor
E
PIM
L-R
W-R
Y-B
B-W
Y-B
LG
B-O
R-B
GR
Y-G
L-B
EGR
VG
THA
EVG
EGRC
SCV
VNTO
VNTI
LUSL
VLU
E2
THIA
PIM
C), E 7(D)
E 4(A), E 5(B), E 6(C), E 7(D)
Engine ECU
E 4(A
Engi
VPA
EPA
VCP2
VPA2
EPA2
INJF
#1
#2
#3
#4
W-L
BR-W
BR-R
GR-G
BR-Y
VPA
EPA
VCP2
VPA2
EPA2
A22
Accelerator Position Sensor
EA1
EA1
W-B(*2)
W-B(*3)
P
B-W
R
V
Y-R
+B
GND
INJF
#10
#20
#30
#40
COM1
INJ1
INJ4
I 5(A), I 6(B)
Injector Driver (EDU)
I 5(A), I 6(B)
Injector Driver (EDU)
F 4(A)
Fuel Injector
(No. 1)
F 7
Fuel Injector
(No. 4)
J12(B)
Junction Connector
R-B
W
G
W-B(*3)
(*2)

* 1 : Shielded
* 2 : Before Aug. 2008 Production
* 3 : From Aug. 2008 Production

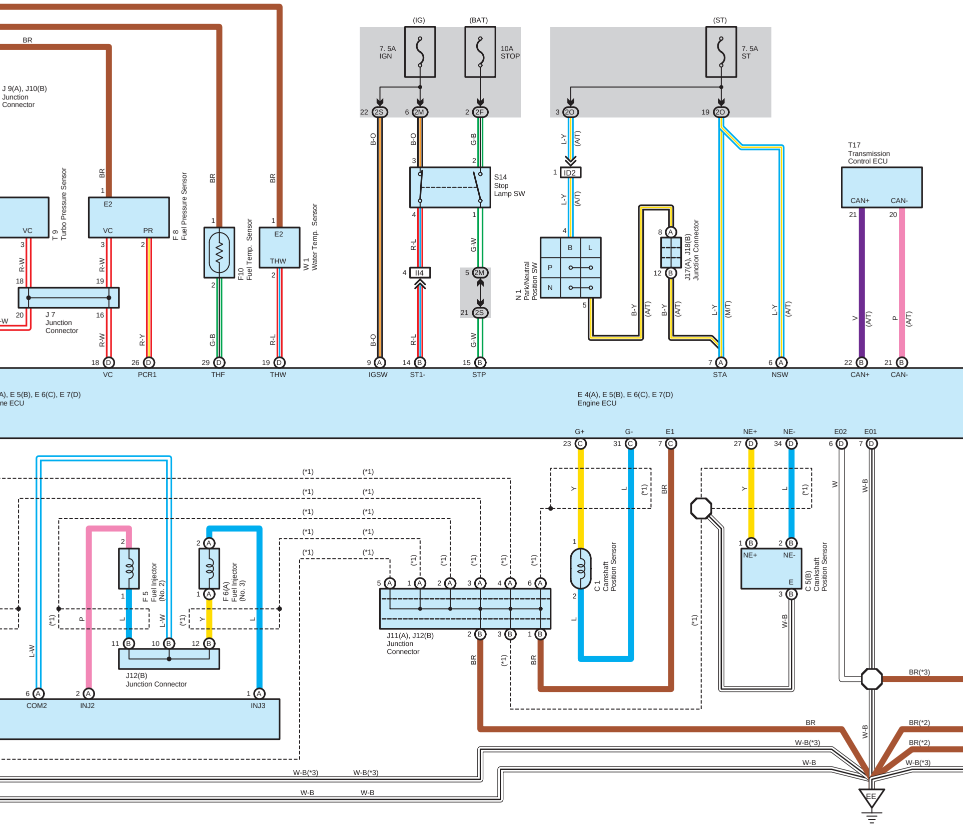

BR
J 9(A), J10(B)
Junction
Connector
(IG)
(BAT)
(ST)
7. 5A
IGN
10A
STOP
7. 5A
ST
22 2S
6 2M
2 2F
3 2O
19 2O
B-O
B-O
G-B
L-Y
(A/T)
ID2
1
T17
Transmission
Control ECU
CAN+
CAN-
21
20
S14
Stop
Lamp SW
3
2
4
1
R-L
G-W
4 II4
5 2M
21 2S
T 9
Turbo Pressure Sensor
VC
E2
VC
PR
F 8
Fuel Pressure Sensor
BR
1
3
3
2
R-W
R-W
18
19
20
16
J 7
Junction
Connector
-W
R-W
R-Y
F10
Fuel Temp. Sensor
E2
THW
W 1
Water Temp. Sensor
G-B
R-L
N 1
Park/Neutral
Position SW
B
L
P
N
5
8 A
12 B
J17(A), J18(B)
Junction Connector
B-Y
(A/T)
L-Y
(M/T)
V
P
18 D
VC
26 D
PCR1
29 D
THF
19 D
THW
9 A
IGSW
14 B
ST1-
15 B
STP
7 A
STA
6 A
NSW
22 B
CAN+
21 B
CAN-
A), E 5(B), E 6(C), E 7(D)
ne ECU
E 4(A), E 5(B), E 6(C), E 7(D)
Engine ECU
G+
G-
E1
NE+
NE-
E02
E01
23 C
31 C
7 C
27 D
34 D
6 D
7 D
(*1)
Y
L
BR
W
W-B
C 1
Camshaft
Position Sensor
1
2
L
1 B
2 B
NE+
NE-
E
3 B
C 5(B)
Crankshaft
Position Sensor
W-B
BR(*3)
F 5
Fuel Injector
(No. 2)
F 6(A)
Fuel Injector
(No. 3)
2
1
2 A
1 A
P
L
L-W
Y
L
11 B
10 B
12 B
J12(B)
Junction Connector
L-W
6 A
COM2
2 A
INJ2
1 A
INJ3
5 A
1 A
2 A
3 A
4 A
6 A
2 B
3 B
1 B
J11(A), J12(B)
Junction
Connector
BR
BR
BR
BR(*2)
BR(*2)
W-B(*3)
W-B
W-B(*3)
W-B(*3)
W-B(*3)
W-B
W-B
EE

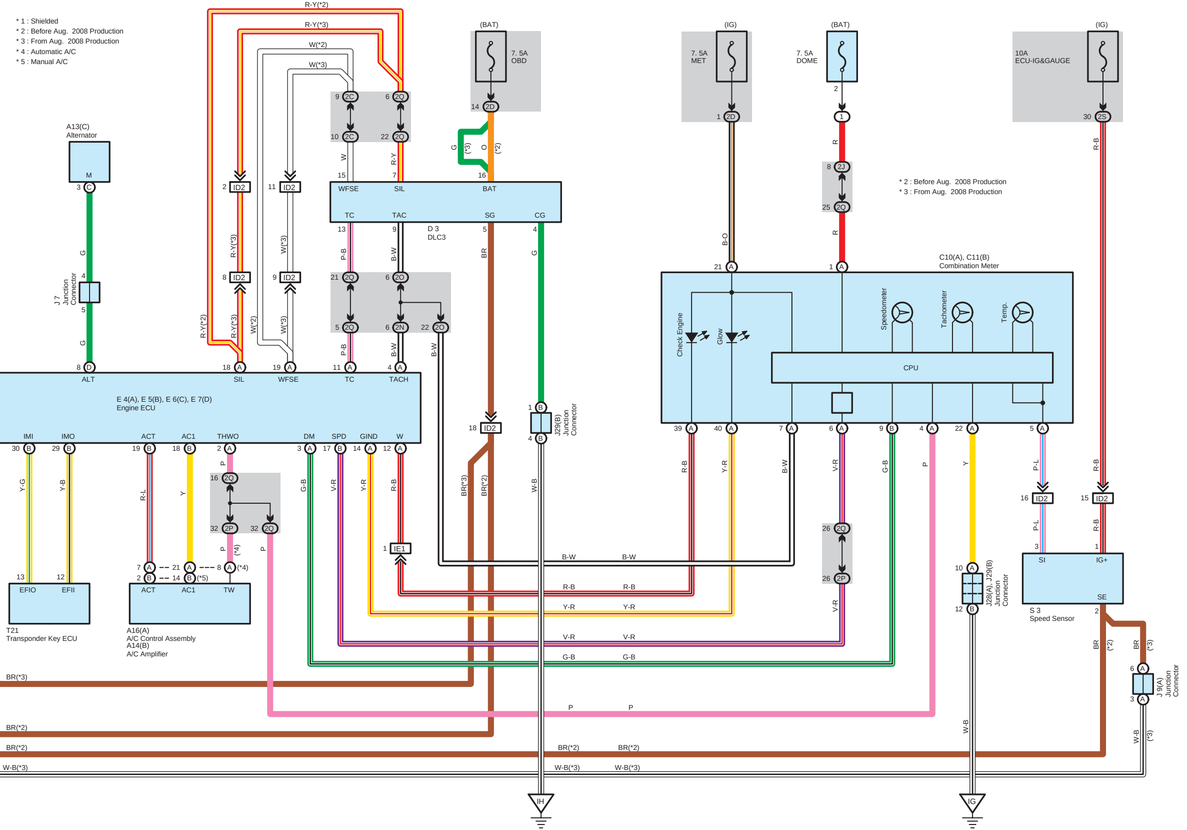

R-Y(*2)
R-Y(*3)
W(*2)
W(*3)
(BAT)
7. 5A
OBD
14 2D
G (*3) O (*2)
9 2C 6 2Q
10 2C 22 2Q
W R-Y
15 7 16
WFSE SIL BAT
TC TAC SG CG
13 9 5 4
D 3
DLC3
P-B B-W BR G
21 2Q 6 2O
5 2Q 6 2N 22 2O
A13(C)
Alternator
M
3 C
G
J 7
Junction
Connector
4 5
2 ID2
11 ID2
8 ID2
9 ID2
R-Y(*3)
W(*3)
R-Y(*2)
W(*2)
8 D 18 A 19 A 11 A 4 A
ALT SIL WFSE TC TACH
E 4(A), E 5(B), E 6(C), E 7(D)
Engine ECU
IMI IMO ACT AC1 THWO DM SPD GIND W
30 B 29 B 19 B 18 B 2 A 3 A 17 B 14 A 12 A
Y-G Y-B R-L Y P G-B V-R Y-R R-B
16 2Q
32 2P 32 2Q
P (*4) P
7 A 21 A 8 A (*4)
2 B 14 B (*5)
13 12
EFIO EFII
T21
Transponder Key ECU
ACT AC1 TW
A16(A)
A/C Control Assembly
A14(B)
A/C Amplifier
1 IE1
18 ID2
BR(*3) BR(*2)
1 B
4 B
J29(B)
Junction
Connector
W-B
B-W
R-B
Y-R
V-R
G-B
P
BR(*3)
BR(*2)
BR(*2)
W-B(*3)
IH
(IG)
7. 5A
MET
1 2D
B-O
(BAT)
7. 5A
DOME
2
1
R
8 2J
25 2Q
R
(IG)
10A
ECU-IG&GAUGE
30 2S
R-B
* 2 : Before Aug. 2008 Production
* 3 : From Aug. 2008 Production
C10(A), C11(B)
Combination Meter
21 A 1 A
Check Engine
Glow
Speedometer
Tachometer
Temp.
CPU
39 A 40 A 7 A 6 A 9 B 4 A 22 A 5 A
R-B Y-R B-W V-R G-B P Y P-L
26 2Q
26 2P
V-R
10 A
12 B
J28(A), J29(B)
Junction
Connector
W-B
IG
16 ID2 15 ID2
P-L R-B
3 1
SI IG+
SE
S 3
Speed Sensor
2
BR (*2) BR (*3)
6 A
3 A
J 9(A)
Junction
Connector
W-B (*3)

* 1 : Shielded
* 2 : Before Aug. 2008 Production
* 3 : From Aug. 2008 Production
* 4 : Automatic A/C
* 5 : Manual A/C