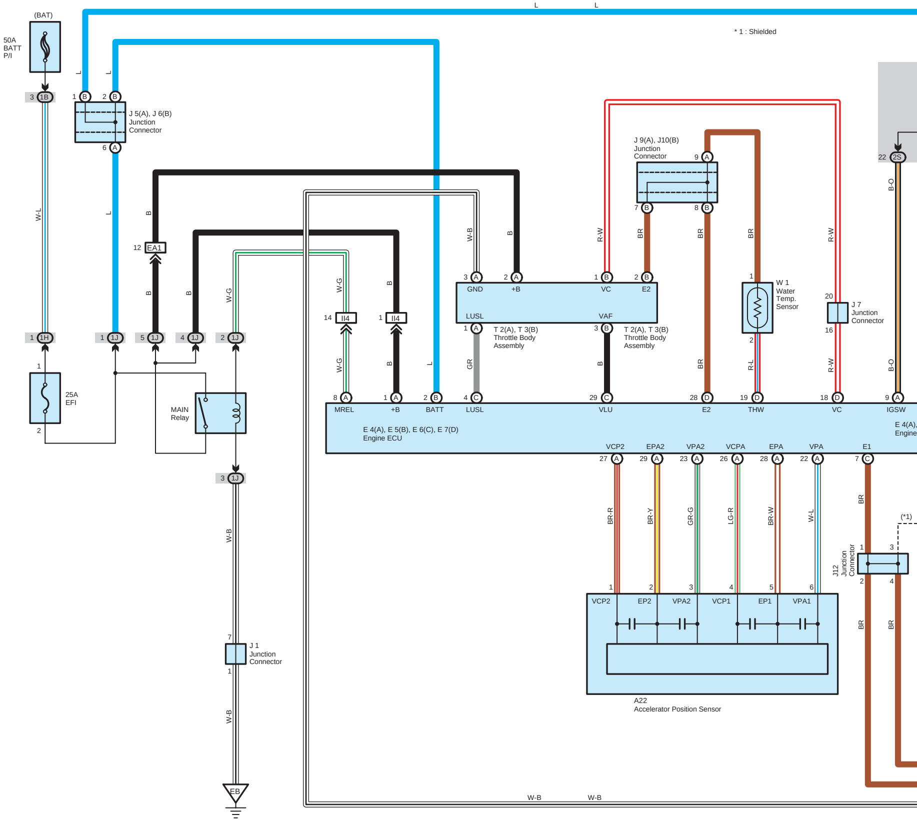

* 1 : Shielded
(BAT)
50A
BATT
P/I
3 1B
L
L
1 B
2 B
J 5(A), J 6(B)
Junction
Connector
6 A
W-L
L
B
12 EA1
B
B
W-G
1 1H
1 1J
5 1J
4 1J
2 1J
1
25A
EFI
2
MAIN
Relay
3 1J
W-B
7
J 1
Junction
Connector
1
W-B
EB
W-G
14 II4
W-G
B
1 II4
B
L
W-B
B
3 A
2 A
GND
+B
LUSL
1 A
GR
R-W
BR
1 B
2 B
VC
E2
VAF
3 B
B
T 2(A), T 3(B)
Throttle Body
Assembly
T 2(A), T 3(B)
Throttle Body
Assembly
J 9(A), J10(B)
Junction
Connector
9 A
7 B
8 B
BR
BR
BR
1
W 1
Water
Temp.
Sensor
2
R-L
R-W
20
J 7
Junction
Connector
16
R-W
22 2S
B-O
B-O
8 A
MREL
1 A
+B
2 B
BATT
4 C
LUSL
29 C
VLU
28 D
E2
19 D
THW
18 D
VC
9 A
IGSW
E 4(A), E 5(B), E 6(C), E 7(D)
Engine ECU
E 4(A),
Engine
VCP2
EPA2
VPA2
VCPA
EPA
VPA
E1
27 A
29 A
23 A
26 A
28 A
22 A
7 C
BR-R
BR-Y
GR-G
LG-R
BR-W
W-L
BR
(*1)
1
3
J12
Junction
Connector
2
4
BR
BR
1
2
3
4
5
6
VCP2
EP2
VPA2
VCP1
EP1
VPA1
A22
Accelerator Position Sensor
W-B
W-B
L
L

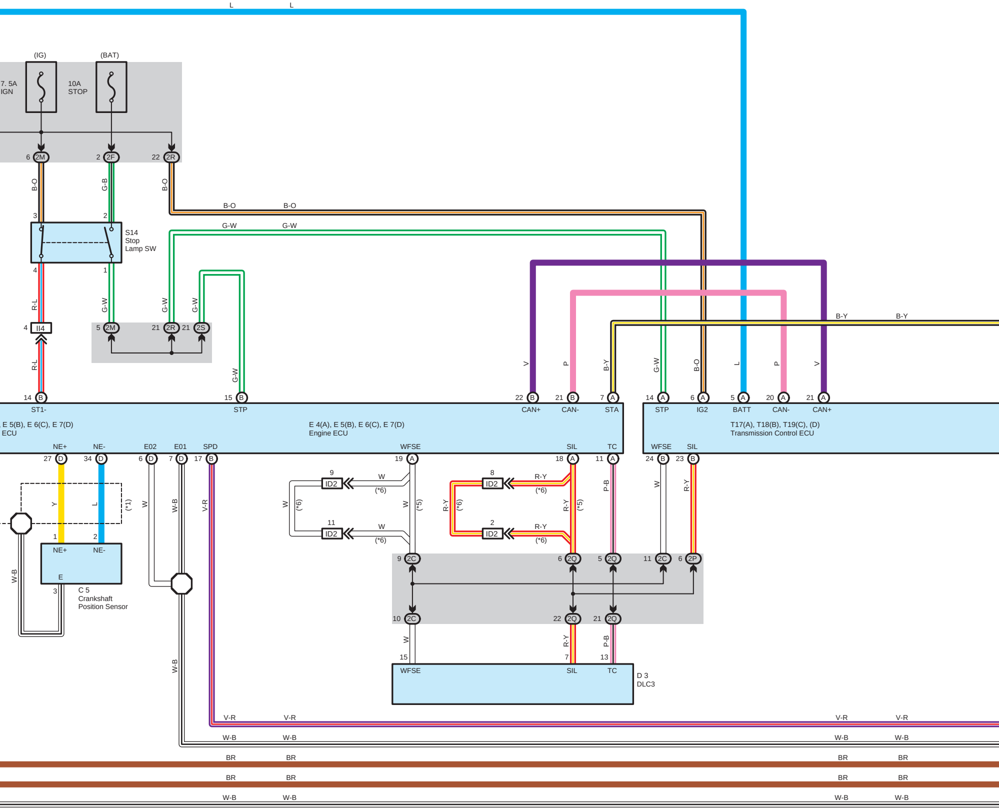

L
L
(IG)
(BAT)
7. 5A
IGN
10A
STOP
6 2M
2 2F
22 2R
B-O
G-B
B-O
B-O
B-O
G-W
G-W
3
2
S14
Stop
Lamp SW
4
1
R-L
G-W
G-W
G-W
4 II4
5 2M
21 2R
21 2S
R-L
G-W
B-Y
B-Y
V
P
B-Y
G-W
B-O
L
P
V
14 B
15 B
22 B
21 B
7 A
14 A
6 A
5 A
20 A
21 A
ST1-
STP
CAN+
CAN-
STA
STP
IG2
BATT
CAN-
CAN+
E 5(B), E 6(C), E 7(D)
ECU
E 4(A), E 5(B), E 6(C), E 7(D)
Engine ECU
T17(A), T18(B), T19(C), (D)
Transmission Control ECU
NE+
NE-
E02
E01
SPD
WFSE
SIL
TC
WFSE
SIL
27 D
34 D
6 D
7 D
17 B
19 A
18 A
11 A
24 B
23 B
Y
L
(*1)
W
W-B
V-R
9
ID2
W
(*6)
W
(*6)
11
ID2
W
(*6)
W
(*5)
8
ID2
R-Y
(*6)
R-Y
(*6)
2
ID2
R-Y
(*6)
R-Y
(*5)
P-B
W
R-Y
1
2
NE+
NE-
E
3
W-B
C 5
Crankshaft
Position Sensor
9 2C
6 2Q
5 2Q
11 2C
6 2P
10 2C
22 2Q
21 2Q
W
R-Y
P-B
15
7
13
WFSE
SIL
TC
D 3
DLC3
W-B
V-R
V-R
V-R
V-R
W-B
W-B
W-B
W-B
BR
BR
BR
BR
BR
BR
BR
BR
W-B
W-B
W-B
W-B

* 3 : Before Oct. 2007 Production
* 4 : From Oct. 2007 Production
* 5 : Before Oct. 2008 Production
* 6 : From Oct. 2008 Production

* 2 : w/ Center Differential Lock System
* 3 : Before Oct. 2007 Production
* 4 : From Oct. 2007 Production
* 5 : Before Oct. 2008 Production
* 6 : From Oct. 2008 Production

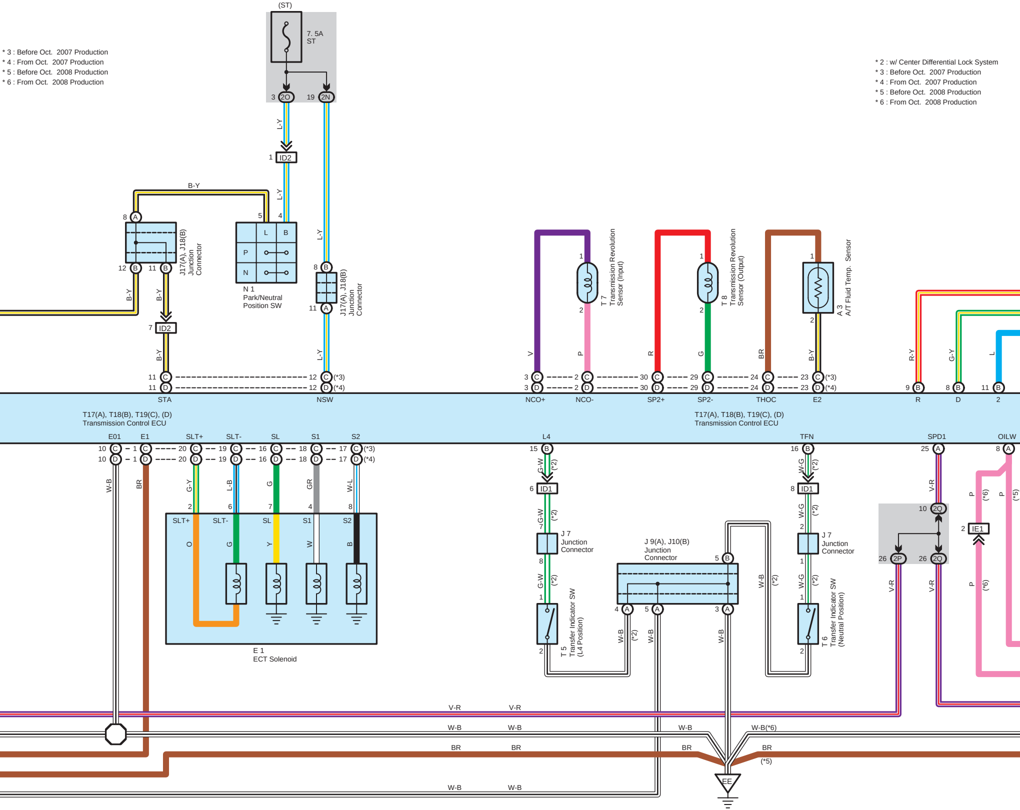
(ST)
7. 5A
ST
3 2O
19 2N
L-Y
1 ID2
B-Y
8 A
12 B
11 B
J17(A), J18(B)
Junction
Connector
L
B
P
N
5
4
N 1
Park/Neutral
Position SW
8 B
11 A
7 ID2
11 C
11 D
12 C (*3)
12 D (*4)
STA
NSW
V
P
R
G
BR
B-Y
1
2
T 7
Transmission Revolution
Sensor (Input)
T 8
Transmission Revolution
Sensor (Output)
A 3
A/T Fluid Temp. Sensor
3 C
3 D
2 C
2 D
30 C
30 D
29 C
29 D
24 C
24 D
23 C (*3)
23 D (*4)
NCO+
NCO-
SP2+
SP2-
THOC
E2
R-Y
G-Y
L
9 B
8 B
11 B
R
D
2
T17(A), T18(B), T19(C), (D)
Transmission Control ECU
E01
E1
SLT+
SLT-
SL
S1
S2
10 C
10 D
1 C
1 D
20 C
20 D
19 C
19 D
16 C
16 D
18 C
18 D
17 C (*3)
17 D (*4)
W-B
BR
G-Y
L-B
G
GR
W-L
O
Y
W
B
E 1
ECT Solenoid
L4
15 B
G-W
(*2)
6 ID1
7
8
J 7
Junction
Connector
T 5
Transfer Indicator SW
(L4 Position)
J 9(A), J10(B)
Junction
Connector
5 B
4 A
5 A
3 A
TFN
16 B
W-G
8 ID1
T 6
Transfer Indicator SW
(Neutral Position)
SPD1
25 A
V-R
10 2Q
26 2P
26 2Q
OILW
8 A
P
(*6)
(*5)
2 IE1
V-R
W-B
W-B(*6)
BR
(*5)
EE

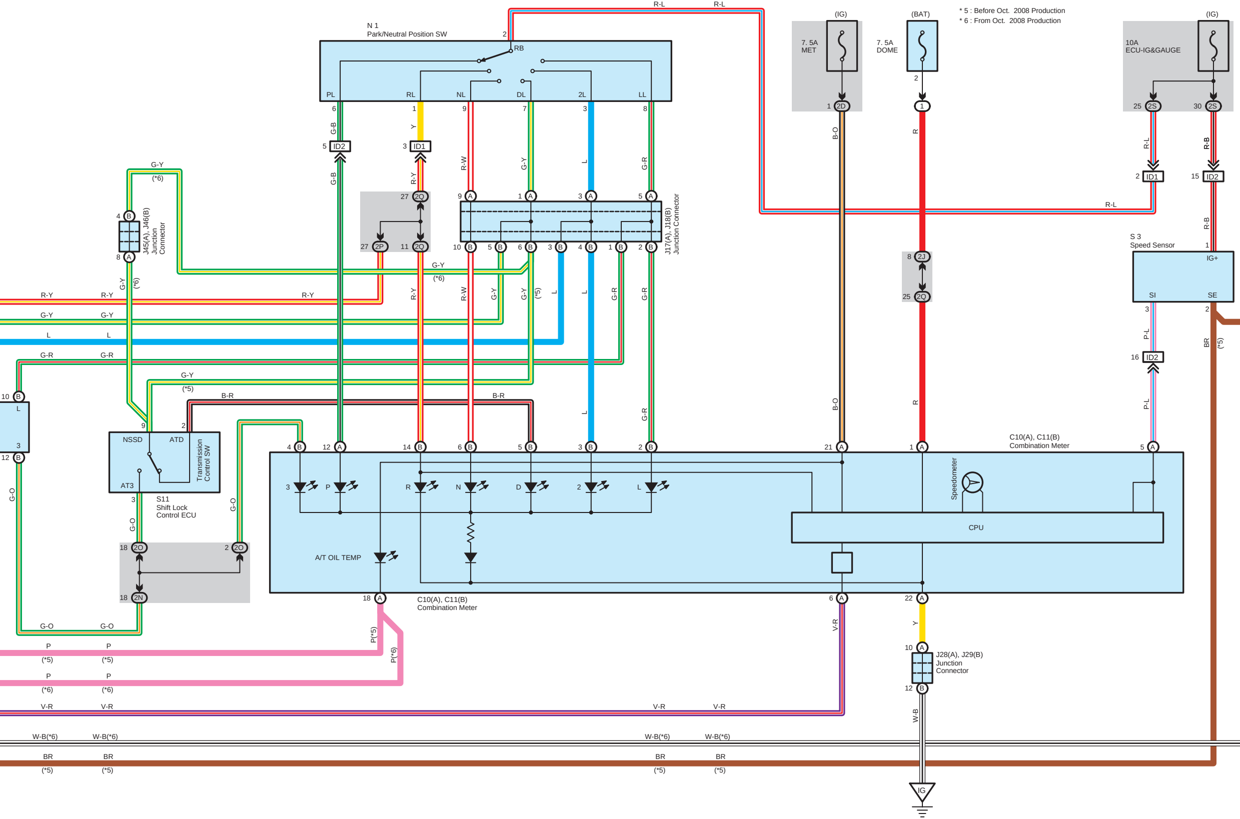

* 5 : Before Oct. 2008 Production
* 6 : From Oct. 2008 Production

N 1
Park/Neutral Position SW
RB
PL
RL
NL
DL
2L
LL
(IG)
7. 5A
MET
(BAT)
7. 5A
DOME
10A
ECU-IG&GAUGE
R-L
G-B
Y
R-W
G-Y
L
G-R
B-O
R
R-B
ID1
ID2
2D
2S
2Q
2P
2J
2O
2N
J45(A), J46(B)
Junction
Connector
J17(A), J18(B)
Junction Connector
S 3
Speed Sensor
IG+
SI
SE
P-L
BR
(*5)
(*6)
J 9(A)
Junction
Connector
W-B
R-Y
B-R
G-O
NSSD
ATD
AT3
Transmission
Control SW
S11
Shift Lock
Control ECU
C10(A), C11(B)
Combination Meter
Speedometer
CPU
A/T OIL TEMP
P
R
N
D
3
2
L
P(*5)
P(*6)
V-R
W-B(*6)
J28(A), J29(B)
Junction
Connector
IG