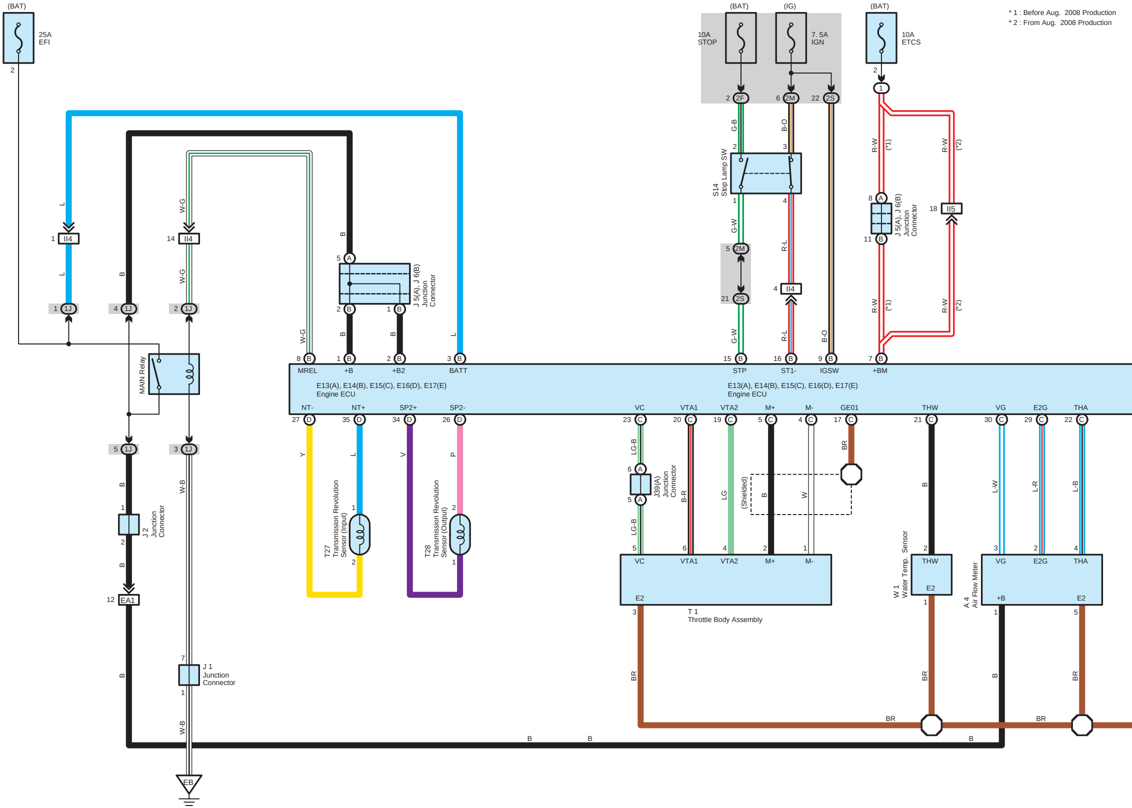
(BAT)
25A EFI
2
L
1 II4
B
W-G
14 II4
1 1J
4 1J
2 1J
MAIN Relay
5 1J
3 1J
B
W-B
1
J 2 Junction Connector
2
12 EA1
7
J 1 Junction Connector
1
EB
B
5 A
J 5(A), J 6(B) Junction Connector
2 B
1 B
8 B MREL
1 B +B
2 B +B2
3 B BATT
E13(A), E14(B), E15(C), E16(D), E17(E) Engine ECU
NT- 27 D
NT+ 35 D
SP2+ 34 D
SP2- 26 D
Y
L
V
P
T27 Transmission Revolution Sensor (Input)
T28 Transmission Revolution Sensor (Output)
(BAT)
(IG)
10A STOP
7. 5A IGN
2 2F
6 2M
22 2S
G-B
B-O
S14 Stop Lamp SW
G-W
R-L
5 2M
21 2S
4 II4
15 B STP
16 B ST1-
9 B IGSW
(BAT)
10A ETCS
1
R-W
(*1)
(*2)
8 A
11 B
18 II5
7 B +BM
E13(A), E14(B), E15(C), E16(D), E17(E) Engine ECU
VC 23 C
VTA1 20 C
VTA2 19 C
M+ 5 C
M- 4 C
GE01 17 C
THW 21 C
VG 30 C
E2G 29 C
THA 22 C
LG-B
6 A
5 A
J39(A) Junction Connector
B-R
LG
(Shielded)
W
BR
T 1 Throttle Body Assembly
VC VTA1 VTA2 M+ M- E2
W 1 Water Temp. Sensor
THW E2
A 4 Air Flow Meter
VG E2G THA +B E2
L-W
L-R
L-B

* 1 : Before Aug. 2008 Production
* 2 : From Aug. 2008 Production

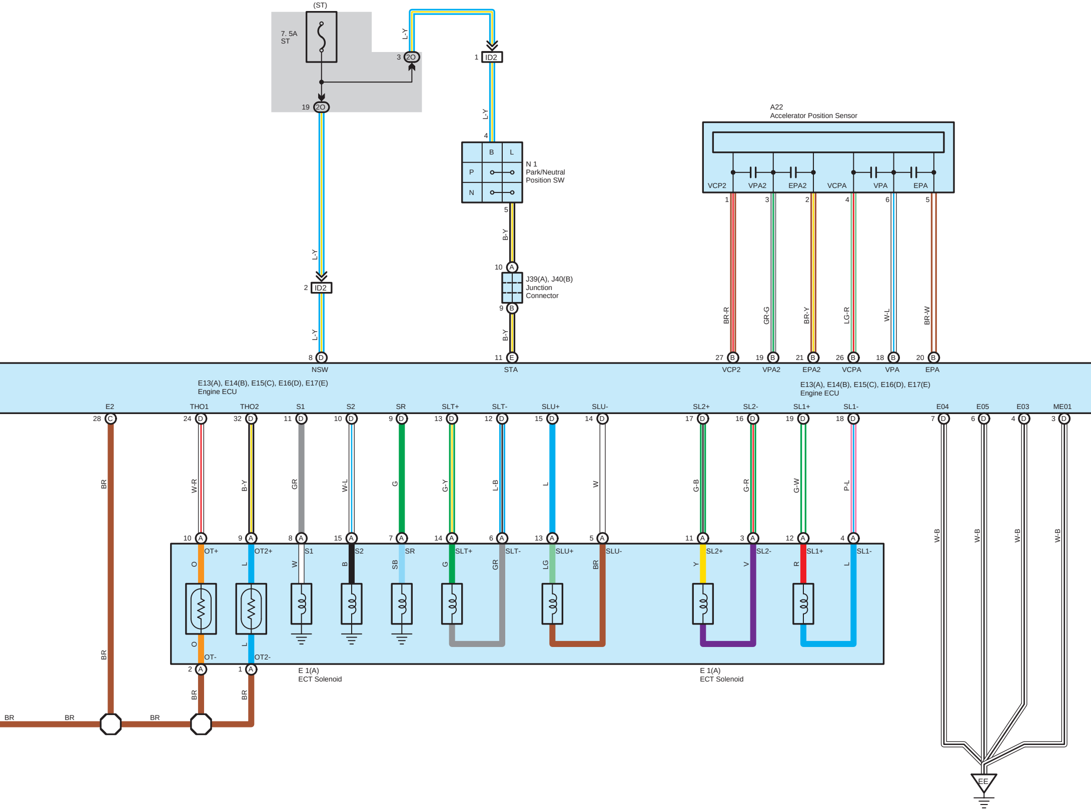
(ST)
7. 5A
ST
3 2O
19 2O
L-Y
1 ID2
L-Y
4
B
L
P
N
N 1
Park/Neutral
Position SW
5
B-Y
10 A
J39(A), J40(B)
Junction
Connector
9 B
B-Y
11 E
STA
L-Y
2 ID2
L-Y
8 D
NSW
A22
Accelerator Position Sensor
VCP2
VPA2
EPA2
VCPA
VPA
EPA
1
3
2
4
6
5
BR-R
GR-G
BR-Y
LG-R
W-L
BR-W
27 B
19 B
21 B
26 B
18 B
20 B
VCP2
VPA2
EPA2
VCPA
VPA
EPA
E13(A), E14(B), E15(C), E16(D), E17(E)
Engine ECU
E13(A), E14(B), E15(C), E16(D), E17(E)
Engine ECU
E2
THO1
THO2
S1
S2
SR
SLT+
SLT-
SLU+
SLU-
SL2+
SL2-
SL1+
SL1-
E04
E05
E03
ME01
28 C
24 D
32 D
11 D
10 D
9 D
13 D
12 D
15 D
14 D
17 D
16 D
19 D
18 D
7 D
6 D
4 D
3 D
BR
W-R
B-Y
GR
W-L
G
G-Y
L-B
L
W
G-B
G-R
G-W
P-L
W-B
W-B
W-B
W-B
10 A
9 A
8 A
15 A
7 A
14 A
6 A
13 A
5 A
11 A
3 A
12 A
4 A
OT+
OT2+
S1
S2
SR
SLT+
SLT-
SLU+
SLU-
SL2+
SL2-
SL1+
SL1-
O
L
W
B
SB
G
GR
LG
BR
Y
V
R
L
O
L
OT-
OT2-
2 A
1 A
E 1(A)
ECT Solenoid
E 1(A)
ECT Solenoid
BR
BR
BR
BR
BR
BR
BR
EE

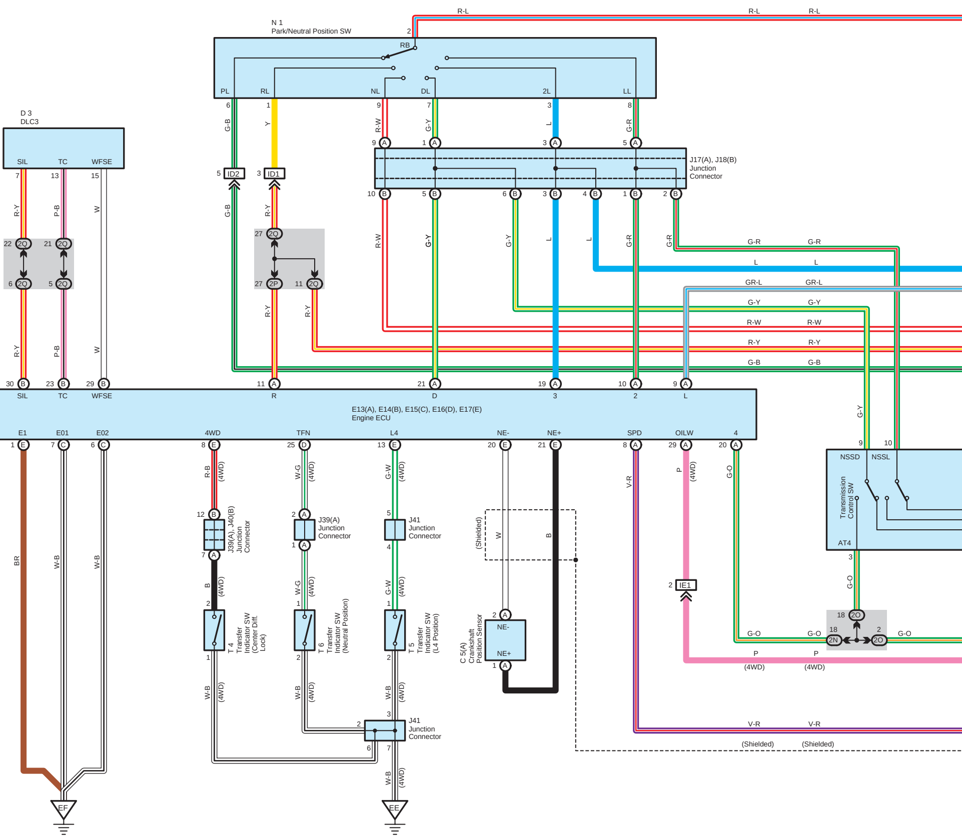
N 1
Park/Neutral Position SW
RB
PL
RL
NL
DL
2L
LL
R-L
D 3
DLC3
SIL
TC
WFSE
R-Y
P-B
W
G-B
Y
R-W
G-Y
L
G-R
ID2
ID1
2Q
2P
J17(A), J18(B)
Junction
Connector
GR-L
E13(A), E14(B), E15(C), E16(D), E17(E)
Engine ECU
SIL
TC
WFSE
R
D
3
2
L
E1
E01
E02
4WD
TFN
L4
NE-
NE+
SPD
OILW
4
BR
W-B
R-B
(4WD)
W-G
G-W
B
J39(A), J40(B)
Junction
Connector
J39(A)
Junction
Connector
J41
Junction
Connector
T 4
Transfer
Indicator SW
(Center Diff.
Lock)
T 6
Transfer
Indicator SW
(Neutral Position)
T 5
Transfer
Indicator SW
(L4 Position)
(Shielded)
C 5(A)
Crankshaft
Position Sensor
NE-
NE+
V-R
P
G-O
IE1
NSSD
NSSL
Transmission
Control SW
AT4
2O
2N
(Shielded)
EF
EE

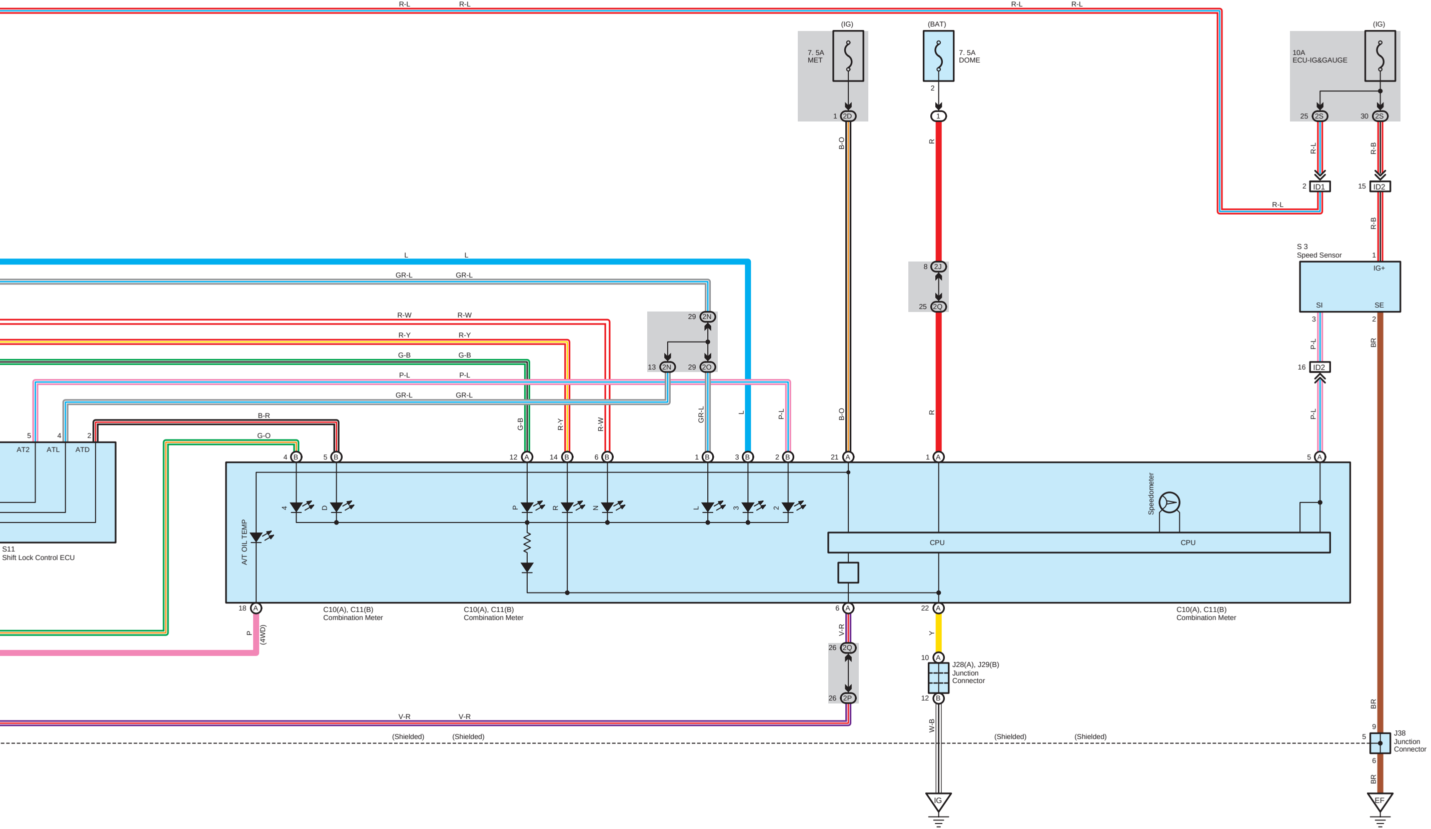
R-L
R-L
R-L
R-L
(IG)
7. 5A
MET
1
2D
B-O
(BAT)
7. 5A
DOME
2
1
R
(IG)
10A
ECU-IG&GAUGE
25
2S
30
2S
R-L
R-B
2
ID1
15
ID2
R-L
R-B
S 3
Speed Sensor
1
IG+
SI
SE
3
2
P-L
BR
16
ID2
P-L
8
2J
25
2Q
R
L
L
GR-L
GR-L
R-W
R-W
R-Y
R-Y
G-B
G-B
P-L
P-L
GR-L
GR-L
29
2N
13
2N
29
2O
B-R
G-O
5
4
2
AT2
ATL
ATD
S11
Shift Lock Control ECU
G-B
R-Y
R-W
GR-L
L
P-L
B-O
4
B
5
B
12
A
14
B
6
B
1
B
3
B
2
B
21
A
1
A
5
A
4
D
P
R
N
L
3
2
A/T OIL TEMP
Speedometer
CPU
CPU
18
A
6
A
22
A
C10(A), C11(B)
Combination Meter
C10(A), C11(B)
Combination Meter
C10(A), C11(B)
Combination Meter
P
(4WD)
V-R
Y
26
2O
26
2P
10
A
J28(A), J29(B)
Junction
Connector
12
B
W-B
V-R
V-R
(Shielded)
(Shielded)
(Shielded)
(Shielded)
BR
9
5
J38
Junction
Connector
6
BR
IG
EF